N3ZI Digital Dial

Printed Circuit Board Manual

Rev 1.2 3 July 2008

SECTION 1, The Basics:

The photo below shows a working basic version of the counter. This version has 6 capacitors, 3 resistors, 2 switches, the microprocessor and the crystal. The PCB is stacked with the LCD module, which is face down on the desk in this photo. This version will count up to 5.5MHz, and requires a regulated 3.3 to 5 v power supply.

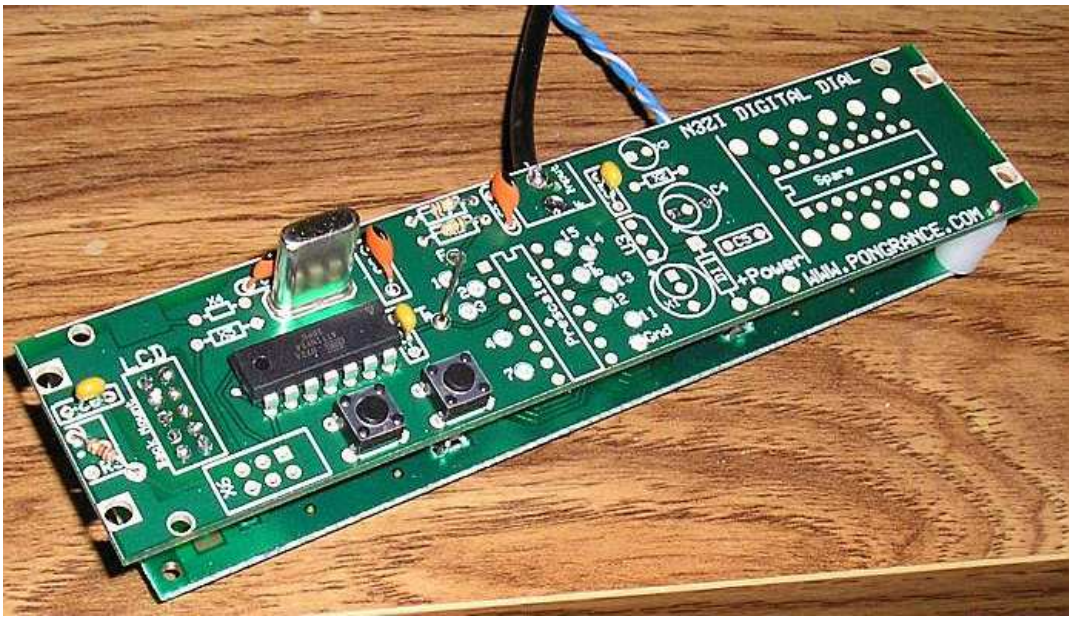

Just a note about the switches, if you want to use different, or remotely mounted switches. There are 4 holes on the PCB for each switch, the upper left is the active signal, the lower right is grounded, the other 2 are not connected.

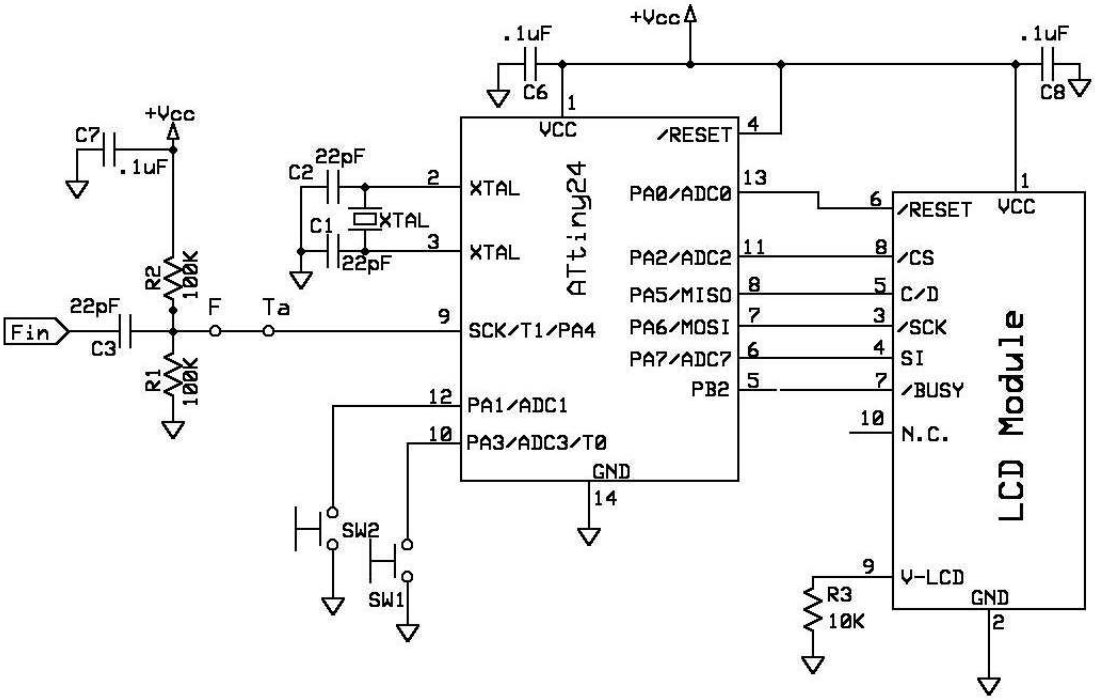

A printed circuit board isn't really necessary for this version, and it could be built without one. In the photo the 22pF capacitors are the orange caps, the 0.1 uF caps are yellow. Note that R3 is mounted diagonally, you can see in at the far left side of the PCB in the photo. This version does not use a prescaler, so you need to solder a jumper from the hole marked "F" to the hole marked "Ta" in order to bypass the prescaler. You can always add a prescaler later.

The LCD Module and the PCB have 4 matching holes. They are rather small for hardware, so I added two holes on the ends which accept 4-40 hardware. 14 Gauge solid wire fits in the LCD module holes and the boards can be made into a solid stack by using holes and spacers. All the holes are plated through so you can solder the 14 gauge wire in place. The electrical connection to the LCD module is made with 10 holes (2 rows of 5) on the right hand side of the photo. The wiring is straight through, and I recommend insulated solid wire, which also provides for some mechanical support. If you are planning to change things from time to time, you probably should use insulated stranded wire that is ~2 inches long so you can separate the two boards.

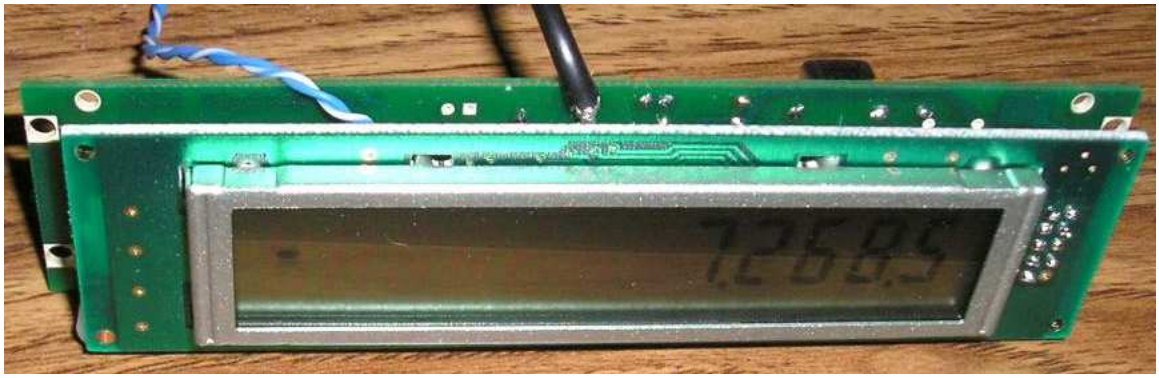

4 additional components are needed if you want to use the voltage regulator on this PCB, and then your power source can be unregulated from 8 to 15 volts.

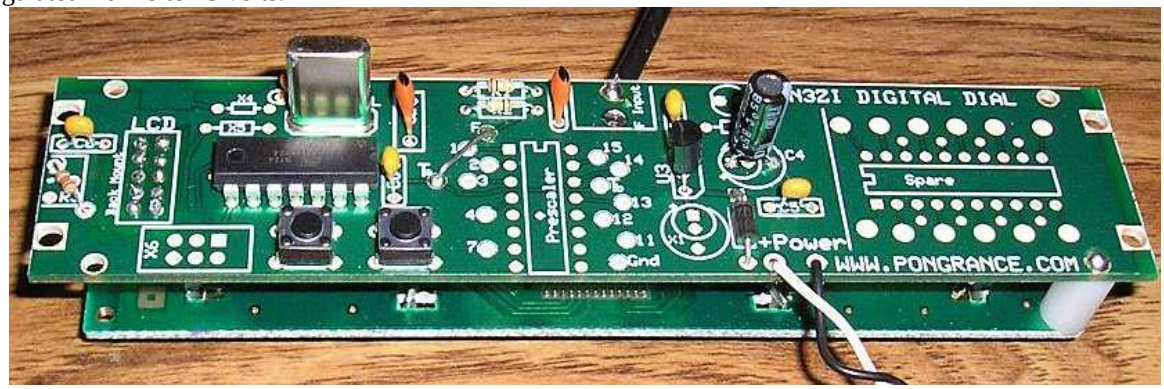

The photo above shows the PCB with the 4 additional components added in, the device is now running off of a 12 v power supply. The schematic for that part is shown below.

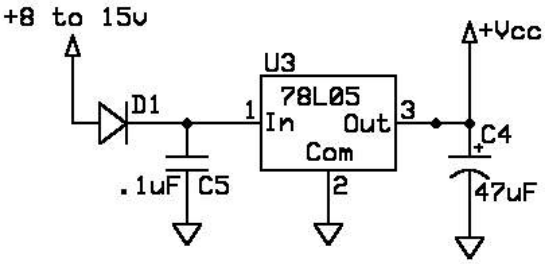

Note that there is an additional ground hold for C4, the electrolytic capacitor. This is so it's easy to use a capacitor with 2mm or 5mm spacing. You will also note that there is another space for an electrolytic capacitor in this area called X1. This is electrically in parallel with C5 and can be installed if you want. This will allow you to use an AC power source since D1 and X1 form a half wave rectifier. A 9 VAC wall wart worked fine for me.

SECTION 2, Advanced topics

Show below is the full schematic of the PCB, which includes all of the extra's

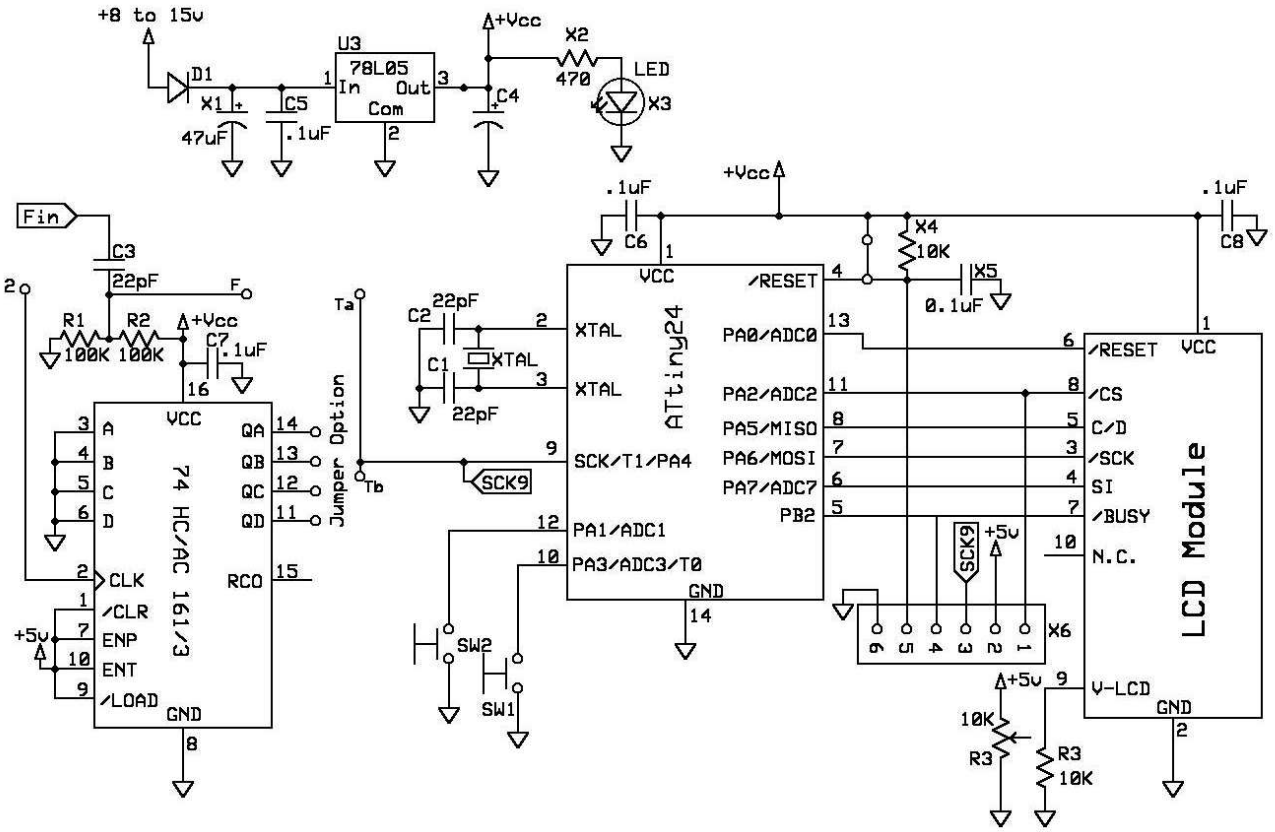

The printed circuit board (PCB) design includes a number of extra features. Components marked on the PCB as X1, X2, etc. are for these extra features. The chart below explains each component, it's purpose and alternate uses.

SilkScreen Marking on PCB	Normal use in Basic version	Normal Use Full version	Normal Appearance / Marking	Notes
C1	22pF Capacitor	22pF Capacitor	22	
C2	22pF Capacitor	22pF Capacitor	22	Can be replaced with a ~50pF trimmer cap
C3	22pF	22pF	22	Can be replaced with a 220 to 1000 pF cap to fine tweak the sensitivity
C4	Not Used	Electrolytic Capacitor	47uF	Actually any value from 10uF to 100 uF should work, there's an extra hole so different lead spacings will work
C5,6,7,8	0.1uF	0.1uF	104	
D1	Not Used	1N4148		Protection for accidental reverse polarity application of power, should be omitted if operating from a battery.
LCD	LCD Module	LCD Module	KTM-S1201	LCD Module, Mounted on the back, 10 wires straight through
Microprocessor	Programmed Micro	Programmed Micro	14 Pin Dip	

Prescaler	Not Used	74AC161/3	16 Pin Dip	74AC161 or 74AC163 will count up to nearly 100Mhz. 74HC Devices have better sensitivity, but only count to 40Mhz
R1	100K	100K	Brown, Black, Yellow	
R2	100K	100K	Brown, Black, Yellow	When not using a prescaler, R2 can be replaced with a 120K resistor to improve sensitivity.
R3	10K	10K	Brown, Black, Orange	Soldered in diagonally (see photo). Extra holes in PCB allows for replacement with a 10K pot for contrast control, or a short to gnd if a 4v supply is used
Spare	Not Used	Not Used		
SW1	Pushbutton Switch	Pushbutton Switch		Can be removed after setup
SW2	Pushbutton Switch	Pushbutton Switch		Can be removed after setup
U3	Not Used	Voltage Regulator	TO-92 Package, 78L05	Can be omitted if you want to operate from 3.6v battery, or another power source
XTAL	Crystal	Crystal	ECXR3392	
X1	Not Used	Not Used		You can put a ~100uF cap here if you want to operate from an AC power source, 9 to 15 VAC
X2	Not Used	Not Used		470 Ohm resistor for power on LED
X3	Not Used	Not Used		Power on LED
X4	Not Used	Not Used		10K Resistor but you must cut the shorting trace on the back, used if X6 is installed, or if an external reset is desired
X5	Not Used	Not Used		0.1uF Capacitor, used if X6 is installed, or if an external reset is desired
X6	Not Used	Not Used		6 Pin Header used for Atmel Programming connector

Shown below is a photo of R3 when installed as a discreet 10K resistor, as opposed to a Potentiometer.

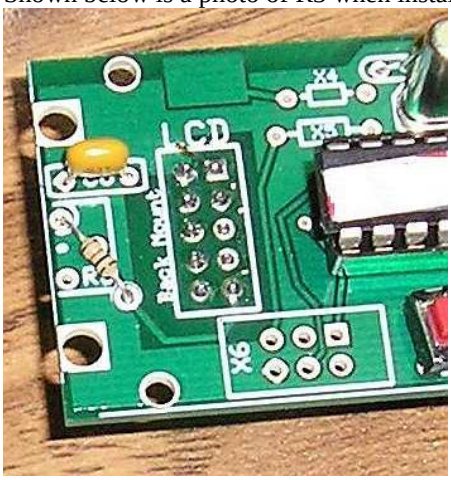

Prescaler chip:

This design supports a number of different prescaler (divider) chips. If you VFO is at 5.5MHz or below you do not need a preselector and this counter will work better without one. If your VFO is between 5 and 45MHz, you should use a 74HC161 prescaler. If your VFO is above 25Mhz, then you can use a 74AC161 prescaler. But do not use the 74AC161 prescaler with a VFO below 20 MHz. I should note that the 74xC163 counters are identical in this application and can be substituted.

VFO Frequency Range	**Recommended prescaler Chip**	**Timebase Factor**	**Div/ by mode**	**Jumpers**
Under 5.5 MHz	NONE	1 or 10	NONE	Jumper F to Ta
Between 5 MHz and 11 MHz	74HC161	2 or 20	Div/2	Jumper F to 2, Tb to 14
Between 10 and 22Mhz	74HC161	4 or 40	Div/4	Jumper F to 2, Tb to 13
Between 20 and 45 MHz	74HC161, or 74AC161	8 or 80	Div .8	Jumper F to 2, Tb to 12
Above 45 MHz	74AC161	16	Div /16	Jumper F to 2, Tb to 11

When using the higher of the two stated “timebase” factors, you will need to move the decimal point over one place, and your resolution will be 10Hz.

Under normal circumstances, this counter is fed with a sine wave of approx 1 V peak to peak. With this type of input the 74AC161 will not count properly below 20Mhz, because the rise time seen by the internal circuitry is too slow. If your input signal is a square wave, and/or high amplitude, it will work OK, down to DC. The 74HC161 is an older chip and is much more tolerant of slow rise times. They also seem to operate fine well above the 6 meter band. I have tested mine to 69Mhz and they work fine. Consequently I am recommending the 74HC161. If you need the very fastest counter, you can use a 74AC161 which will count to 100Mhz if driven properly.

APPENDIX:

Contrast Potentiometer: You can solder a conventional pot in place of R3. There is also a provision for a slider pot to be use for contrast control. There are two rectangular pads on the PCB front and back side, you will need to scrape the solder mask off of these. Mount your slider pot on the top edge of the board, solder two pins there and pick up ground near C2 (the solid plane on the component side of the PCB is ground) Remove anything you have in the R3 location, and only use a 10K pot. A slider pot makes a very nice contrast control.

There are some cases where you might want a Div/10 prescaler.

The schematics below are examples of a Divide by 10 prescaler. In the first one I'm using a 74HC4017, which can only be configured as a Div /10. Theoretically this will allow operation up to 55MHz, but the HC4017 is only guaranteed to clock up to 25-30MHz, but there are "typical" specifications which range from 40 to 70MHz, depending on the manufacturer. NXP (Phillips) has the best specs, if they are also best in the real world I don't know. Mine ran fine up to 50MHz which is the highest my equipment would allow me to test. You'll have to run everything at 5volts if you are shooting for high speed.

When using this mode, the update rate will be 5 times a second, which is really rather slow for VFO use. But since this one uses a Divide by 10, several interesting changes can be made by fiddling with the decimal points. You can change to resolution to 1 KHz and then it will update at 50 times a second. (timebase factor=1, decimal points to the far right) But if you are looking for precision, change the "timebase factor" in the setup to 100, and set the decimal point 2 digits from the left, and you will have a counter with 10Hz resolution, but the update rate will be very slow.

In order to use the 74HC4013, or the 74HC390, you will need to cut 8 jumpers on the back of the board. The PCB was designed to make it easy to cut these. The pins you need to connect to for both chips are brought out to labeled jumper holes. The photo below shows the back of the board, with yellow slashes over the traces you need to cut.

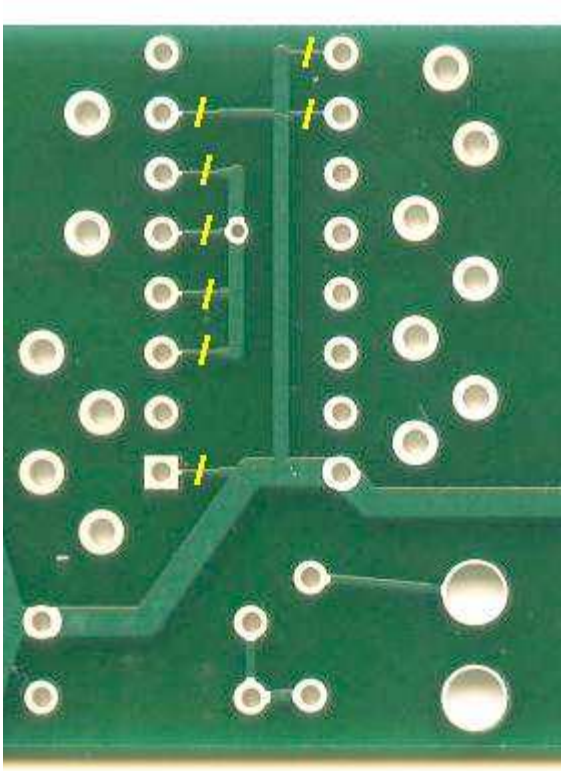

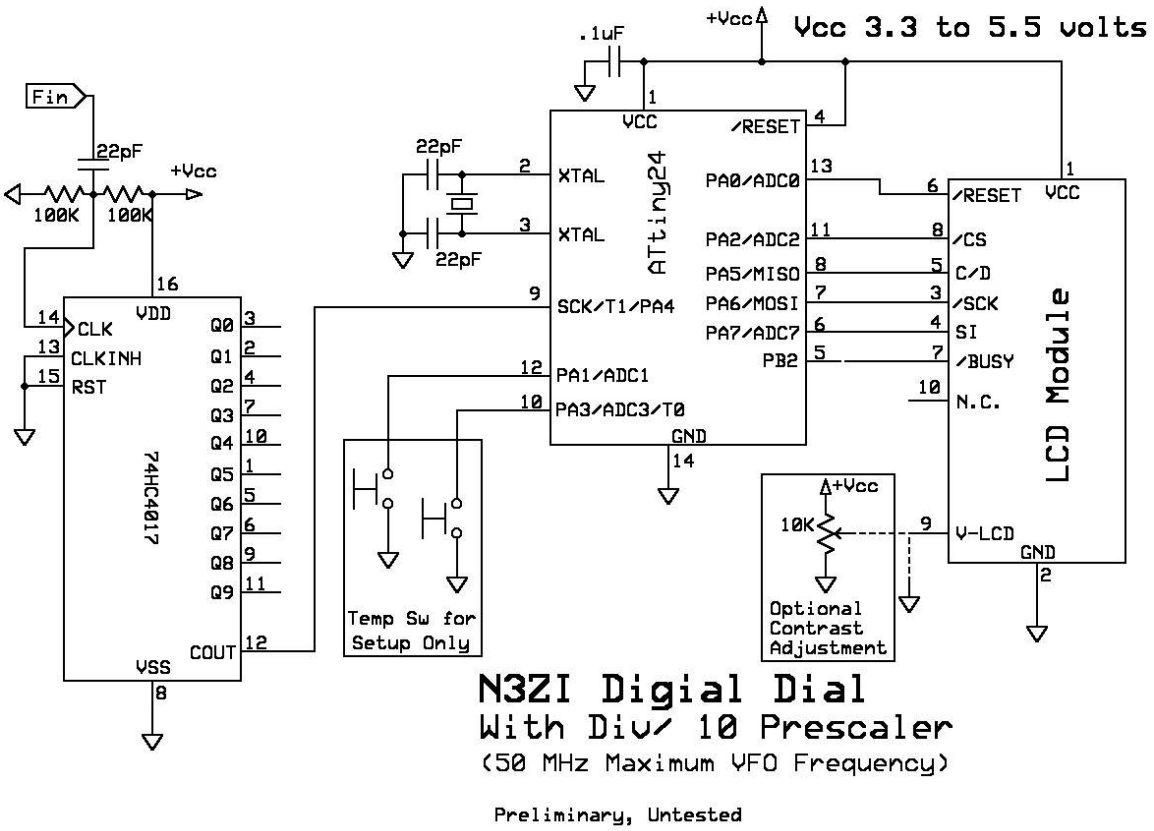

This is the same Div /10 prescaler, but using a 74HC390 chip. In my testing these parts don't reliably clock up to 50MHz, but seem OK in up to the 30 to 45 MHz area.